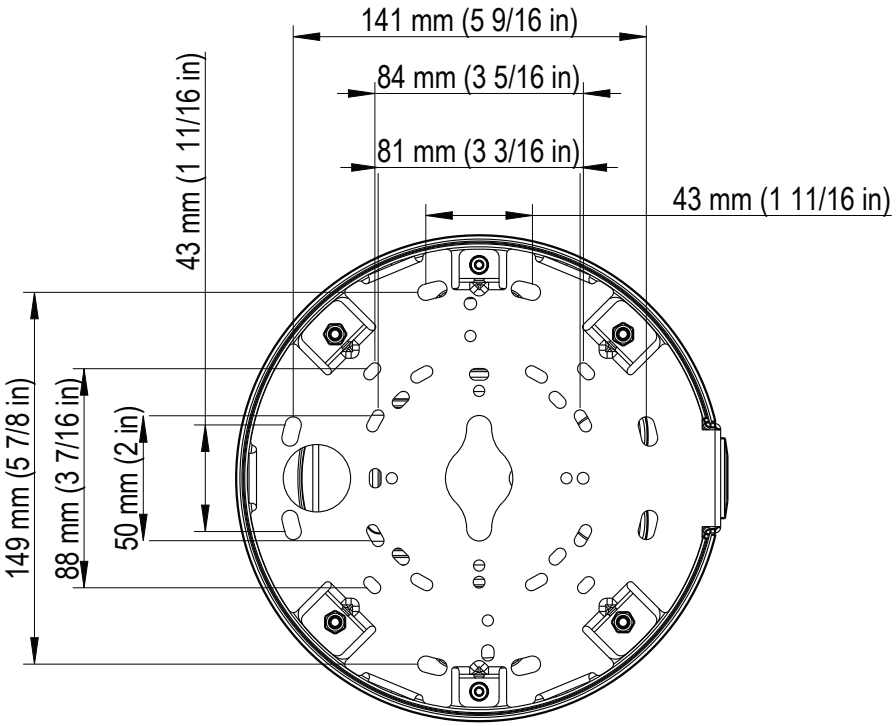

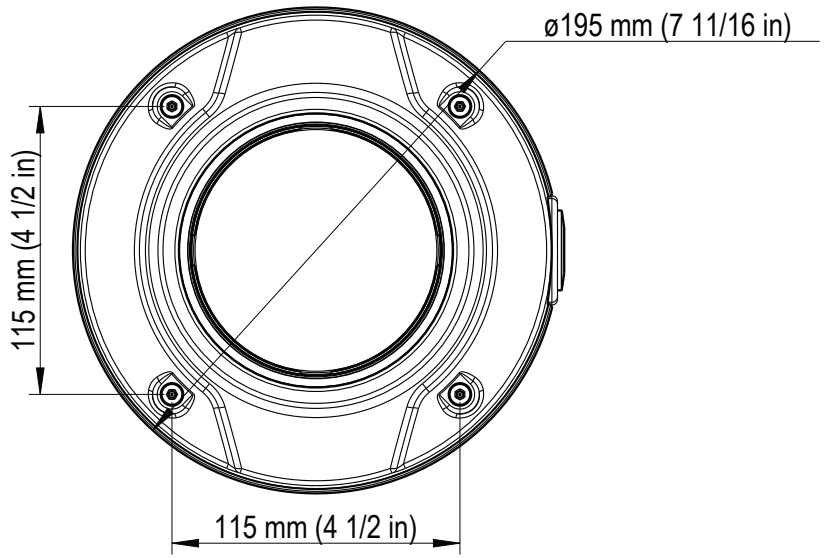

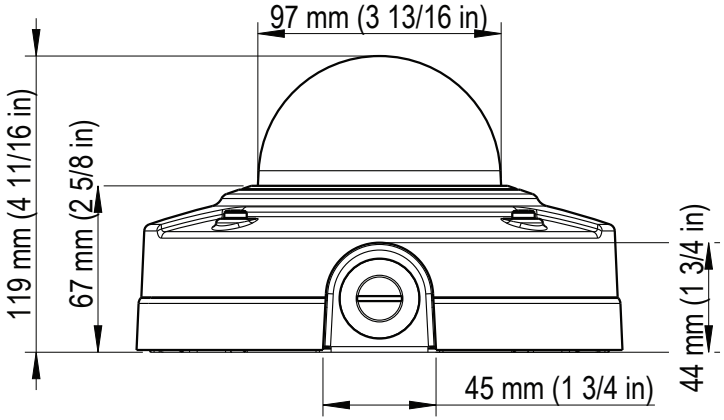

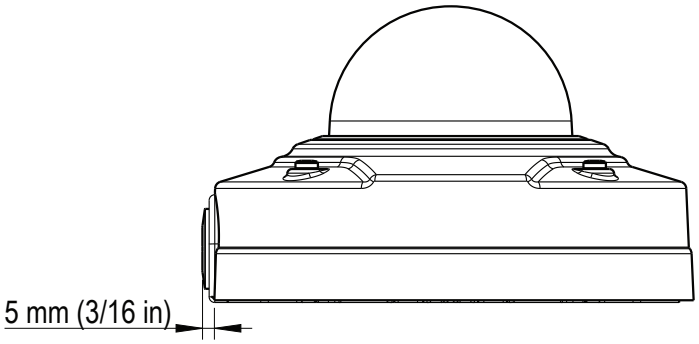

AXIS Q3505-SVE Network Camera

26 AUGUST, 2015 SCALE 1: 3

AXIS COMMUNICATIONS